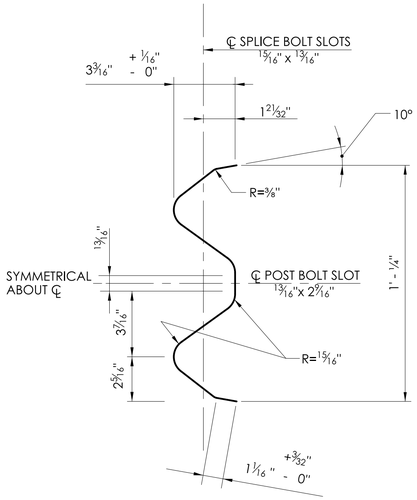

SECTION VIEW

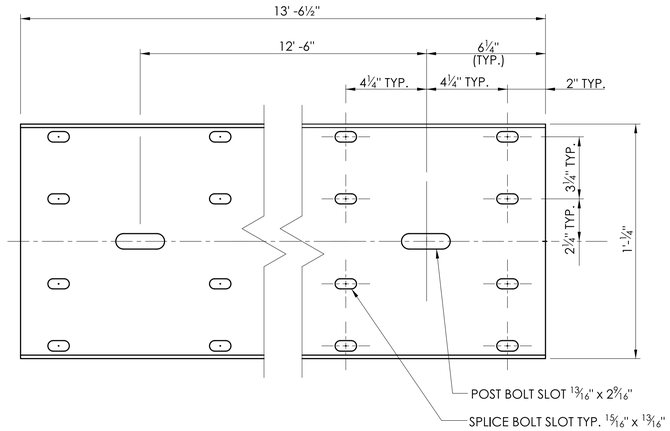

ELEVATION VIEW

TYPICAL W-BEAM RAIL ELEMENT

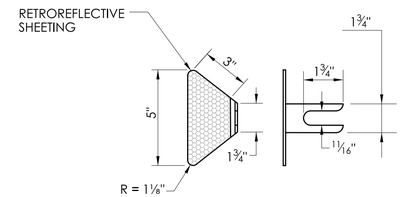

W-BEAM DELINEATOR

GENERAL NOTES:

1. W6 x 9 POSTS MAY BE USED IN PLACE OF W6 x 8.5 POSTS.
2. W-BEAM GUIDERAIL SHALL USE CLASS A (12 GAUGE), TYPE II W-BEAM RAIL ELEMENTS.
3. SEVEN FOOT LONG STEEL POSTS (W6 X 8.5) ARE TO BE INSTALLED WHERE INDICATED ON THE PLANS OR AS DIRECTED BY THE ENGINEER.
4. ALL DIMENSIONS SUBJECT TO MANUFACTURING TOLERANCES

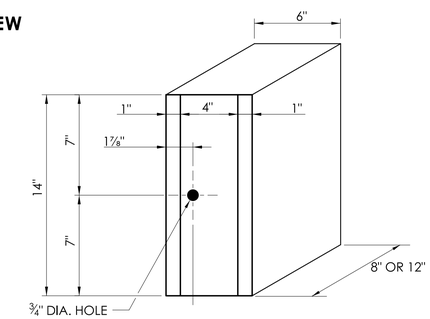

8" or 12" PLASTIC BLOCKOUT
NOMINAL DIMENSIONS

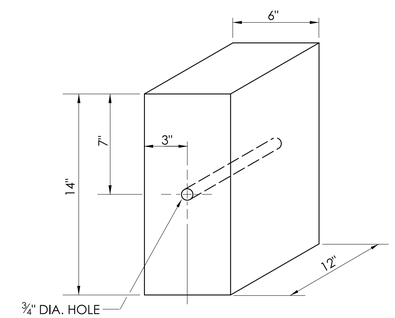

12" WOOD BLOCKOUT

W-BEAM DELINEATOR INSTALLATION NOTES:

1. INSTALL W-BEAM DELINEATORS ON RAIL THAT IS PARALLEL TO AND NOT GREATER THAN 8' FROM THE EDGE OF THE ROADWAY. A MINIMUM OF THREE W-BEAM DELINEATORS SHALL BE INSTALLED ON ANY LENGTH OF GUIDERAIL.
2. THE SPACING OF W-BEAM DELINEATORS IS 50 FEET, INSTALLED AT RAIL SPLICE LOCATIONS. SPACING IS 25 FEET ON RADII LESS THAN 300 FEET.
3. NO W-BEAM DELINEATORS ARE PERMITTED WITHIN 75 FEET OF THE IMPACT HEAD OF ANY TANGENTIAL OR FLARED IMPACT ATTENUATION SYSTEM.
4. RETROREFLECTIVE SHEETING SHALL BE WHITE EXCEPT ON THE LEFT SIDE OF DIVIDED STREETS, HIGHWAYS, RAMPS, AND ONE WAY ROADS IN THE DIRECTION OF TRAVEL WHERE IT SHALL BE YELLOW.

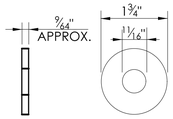

WASHER
[FWC16a]

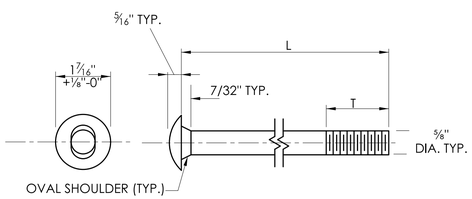

BUTTONHEAD BOLT

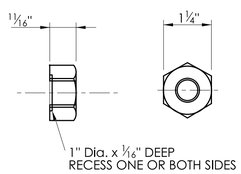

HEX NUT

DESIGNATOR	L	T	INTENDED USE
FBB01	1 1/4"	1 1/8"	RAIL SPLICE BOLTS
FBB02	2"	1 3/4"	RUB RAIL BOLTS
FBB03	10"	4"	POST BOLTS (8" BLOCK OUTS)
	14"	4"	POST BOLTS (12" BLOCK OUTS)
FBB04	18"	4"	POST BOLTS (2-8" BLOCK OUTS)
	22"	4"	POST BOLTS (CRT WOOD POST SYSTEM)

5/8" BUTTON HEAD BOLT(S) AND RECESSED NUT(S)

NOTE: AFTER GALVANIZING, THE NUT SHALL BE FREE RUNNING ON THE BOLT. DIAMETER SHOWN IS TYPICAL FOR ALL GUIDERAIL BOLTS. SEE DETAILS ABOVE FOR SPECIFIC LENGTHS.

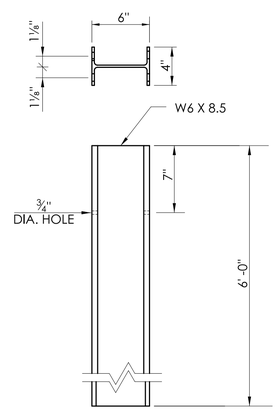

STEEL POST
6' - 0" LONG

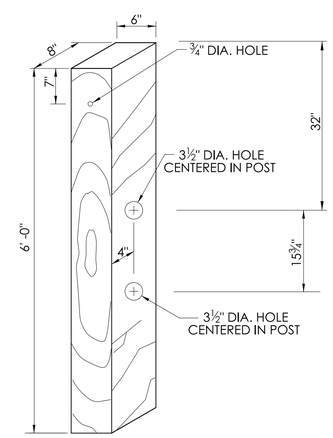

CONTROL RELEASE TIMBER (CRT) POST
6' - 0" LONG

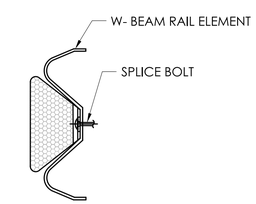

W-BEAM DELINEATOR INSTALLATION

	NOT TO SCALE	SIGNATURE BLOCK: OFFICE OF ENGINEERING 2800 BERLIN TURNPIKE NEWINGTON, CT 06111	SUBMITTED BY: Digitally signed by Leo Fontaine, P.E. Date: 2022.09.27 15:10:20-04'00'	APPROVED BY: Digitally signed by Calabrese, Michael Date: 2022.11.08 09:54:27-05'00'	STATE OF CONNECTICUT DEPARTMENT OF TRANSPORTATION	CTDOT STANDARD SHEET	STANDARD SHEET TITLE: MASH W-BEAM HARDWARE	STANDARD SHEET NO.: HW- 910_20

PLOTTED DATE: 9/21/2022