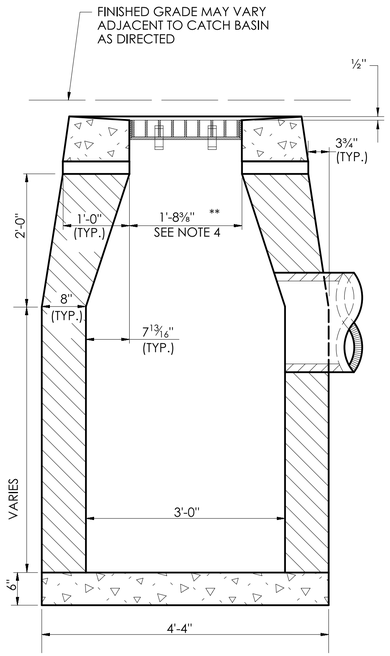

SECTION B

TYPE "C-L" CATCH BASIN

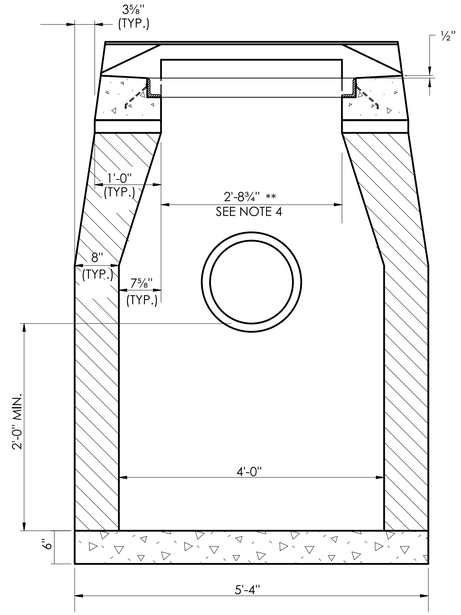

SECTION A

TYPE "C" & "C-L" CATCH BASIN (TYPE "C" TOP SHOWN)

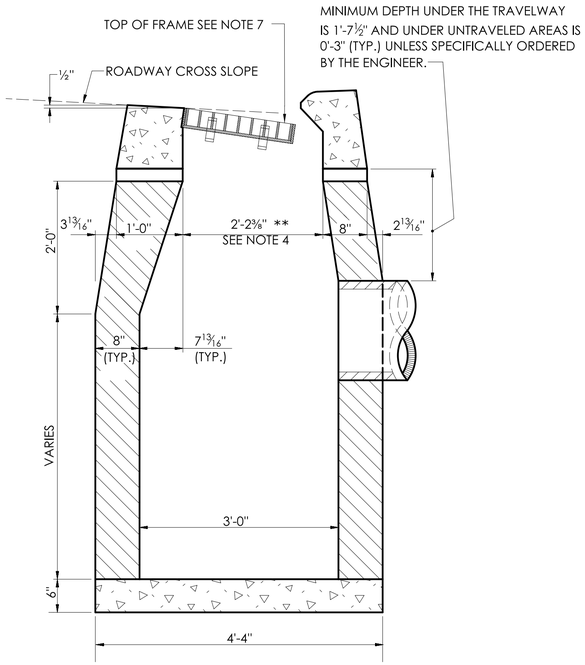

SECTION B

TYPE "C" CATCH BASIN

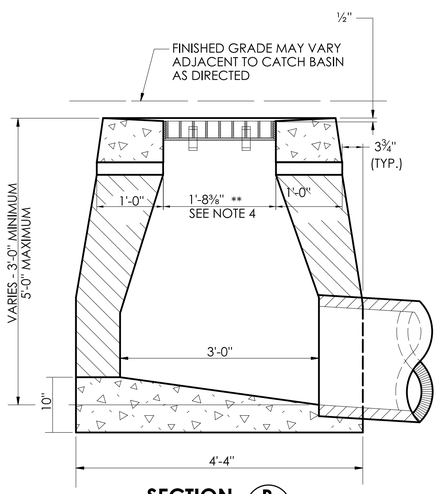

SECTION B

TYPE "C-L" DROP INLET

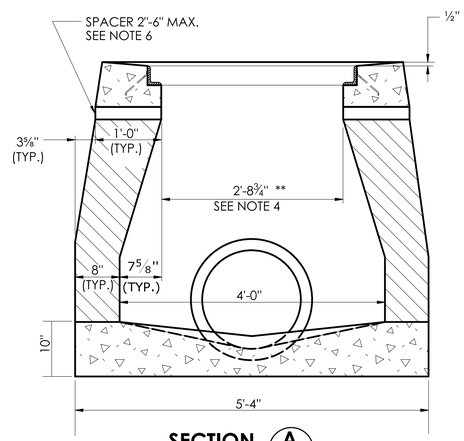

SECTION A

TYPE "C" & "C-L" DROP INLET (TYPE "C-L" TOP SHOWN)

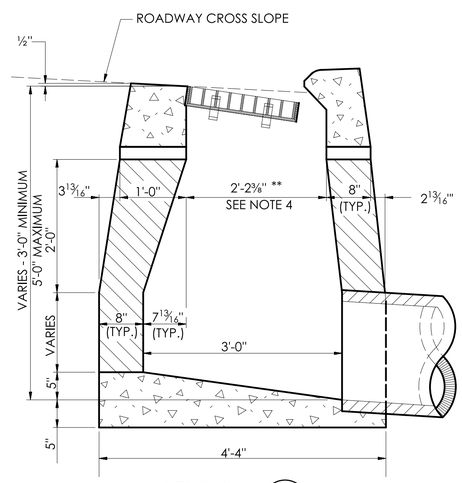

SECTION B

TYPE "C" DROP INLET

GENERAL NOTES:

1. FOR CATCH BASIN TOPS, SEE SHEET NO. HW-586_07.
2. ALL FACES OF STRUCTURES IN CONTACT WITH CONCRETE PAVEMENT SHALL BE COVERED WITH A LAYER OF TAR PAPER OR APPROVED EQUAL.
3. USE 6'-0" ON UPGRADE SIDE (SEE PLAN VIEW) OF CONTINUOUS GRADE AND 1'-0" ON DOWNGRADE SIDE OF CONTINUOUS GRADE OR AS DIRECTED BY THE ENGINEER.
4. IF MASONRY UNITS ARE REQUIRED, THE BASIN SHALL BE CONSTRUCTED IN CONFORMANCE WITH THE DIMENSIONS SHOWN. CORBELLING SHALL BE PERMITTED TO A MAXIMUM OF 3". NO PROJECTION SHALL EXTEND INSIDE THE LIMITS FOR THE CATCH BASIN OPENINGS SHOWN IN THE SECTION VIEWS **.
5. WALL THICKNESS OF ALL CATCH BASINS OVER 10' DEEP SHALL BE INCREASED TO 12" THICK. INSIDE DIMENSION SHALL REMAIN THE SAME. 12" THICKNESS SHALL START AFTER THE FIRST 10'.
6. SPACERS CAN BE EITHER CONCRETE MASONRY UNIT OR PRECAST WITH THE REQUIRED REINFORCING (RECOMMENDED BY THE MANUFACTURER) AS NEEDED TO PROVIDE THE PROPER GRADE SHOWN ON THE PLANS.
7. TOP OF FRAME ELEVATION SHALL BE MEASURED IN THE CENTER OF GRATE AT GUTTER LINE.

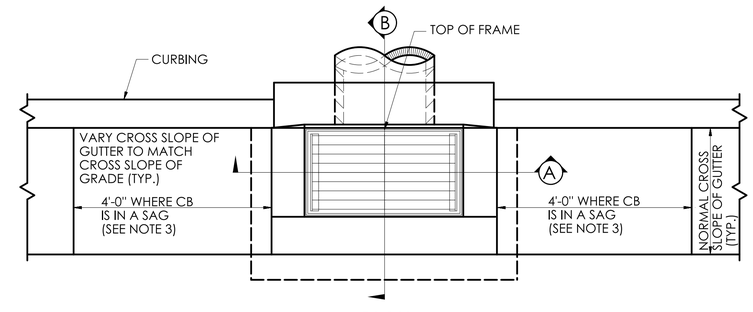

PLAN

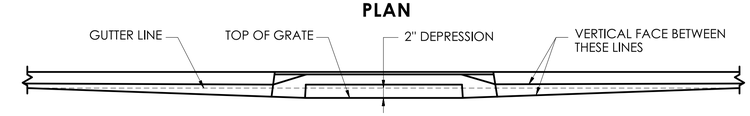

CATCH BASINS IN A LINE WITH 4" CONCRETE PARK CURBING OR 4" BITUMINOUS CONCRETE PARK CURBING

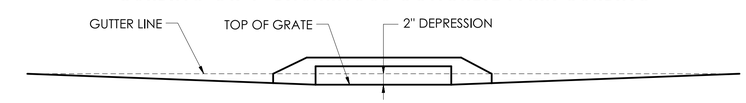

CATCH BASINS WHERE NO CURBING OF ANY TYPE EXISTS OR IS PROPOSED

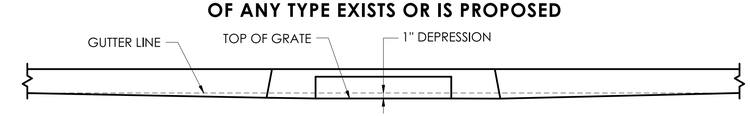

CATCH BASINS IN A LINE WITH 6" CONCRETE CURBING OR 6" STONE CURBING

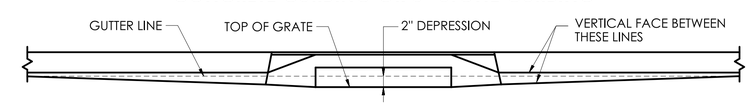

CATCH BASINS IN A LINE WITH 6" BITUMINOUS CONCRETE LIP CURBING (MACHINE FORMED)

DETAILS OF DEPRESSED GUTTER STRIP FOR TYPE "C" CATCH BASIN

	NOT TO SCALE	SIGNATURE BLOCK: OFFICE OF ENGINEERING 2800 BERLIN TURNPIKE NEWINGTON, CT 06111	SUBMITTED BY: Digitally signed by Leo Fontaine, P.E. Date: 2022.09.27 14:31:04-04'00'	APPROVED BY: Digitally signed by Michael Calabrese Date: 2022.11.09 13:51:15-05'00'	STATE OF CONNECTICUT DEPARTMENT OF TRANSPORTATION	CTDOT STANDARD SHEET	STANDARD SHEET TITLE: CATCH BASIN AND DROP INLET TYPES "C" AND "C-L" STRUCTURES	STANDARD SHEET NO.: HW- 586_01

PLOTTED DATE: 9/21/2022