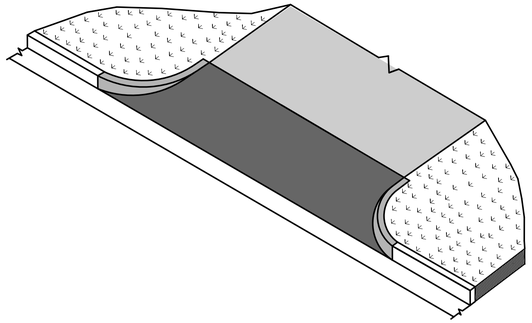

CONCRETE DRIVEWAY RAMP

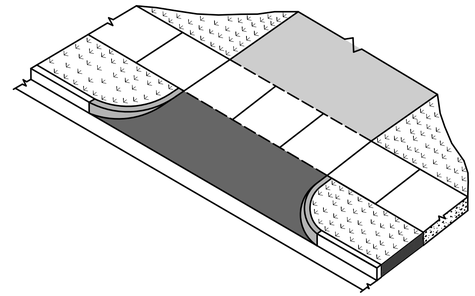

CONCRETE DRIVEWAY RAMP
WITH A PEDESTRIAN SIDEWALK SETBACK

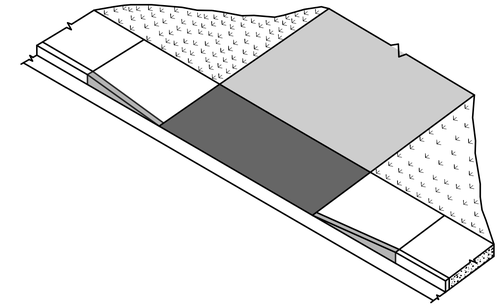

CONCRETE DRIVEWAY RAMP
WITH PEDESTRIAN SIDEWALK AT THE CURB

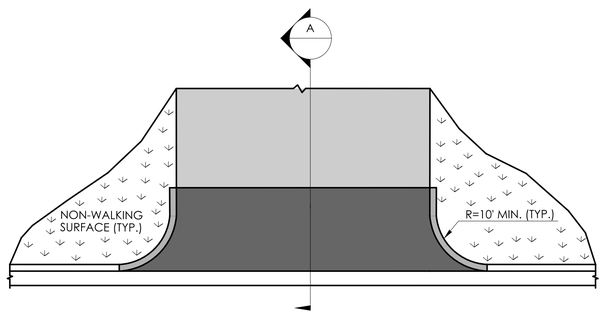

PLAN

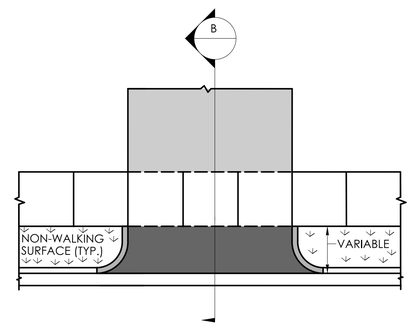

PLAN

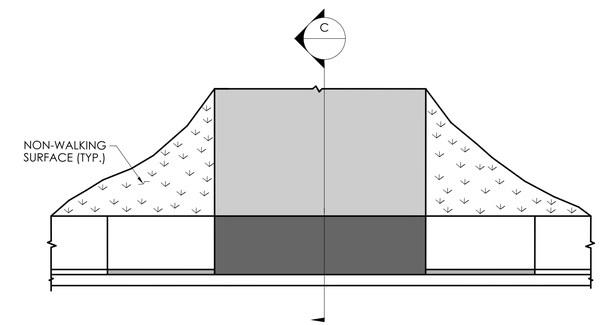

PLAN

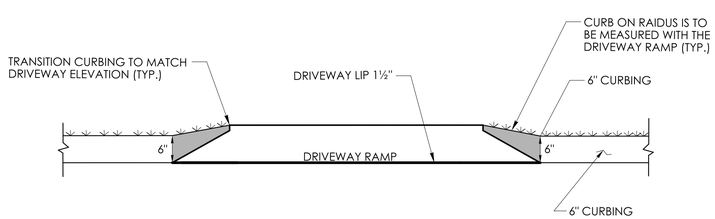

ELEVATION

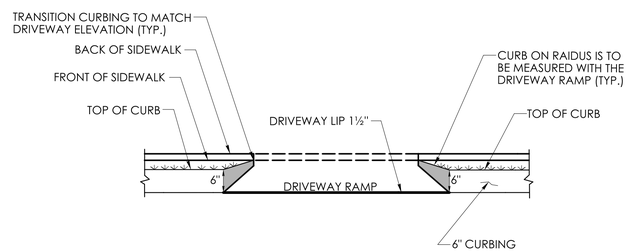

ELEVATION

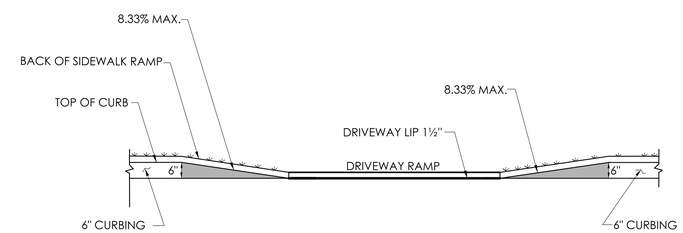

ELEVATION

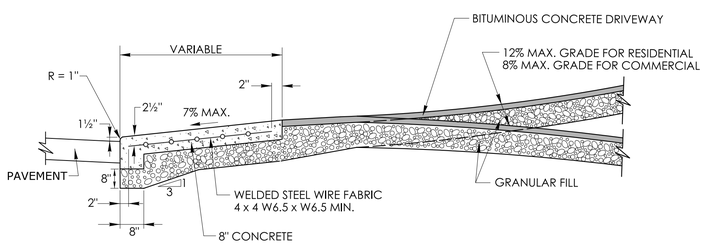

SECTION A

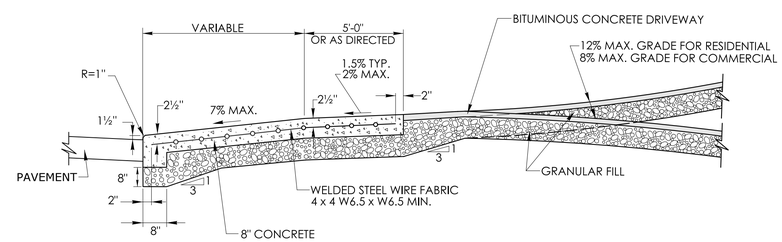

SECTION B

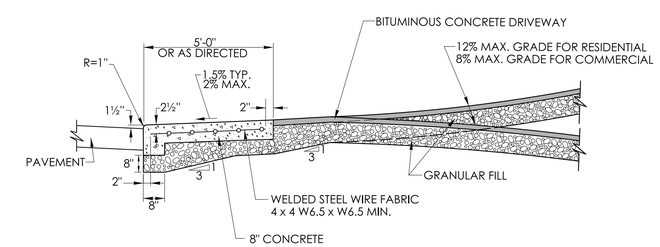

SECTION C

	NOT TO SCALE	SIGNATURE BLOCK: OFFICE OF ENGINEERING 2800 BERLIN TURNPIKE NEWINGTON, CT 06111	SUBMITTED BY: Digitally signed by Leo Fontaine, P.E. Date: 2022.10.05 14:20:04-04'00'	APPROVED BY: Digitally signed by Calabrese, Michael Date: 2022.11.09 14:04:44-05'00'	STATE OF CONNECTICUT DEPARTMENT OF TRANSPORTATION	CTDOT STANDARD SHEET	STANDARD SHEET TITLE: CONCRETE DRIVEWAY RAMPS	STANDARD SHEET NO.: HW-924_01

PLOTTED DATE: 10/5/2022