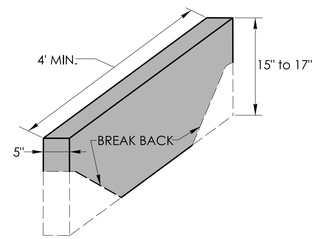

STONE CURBING

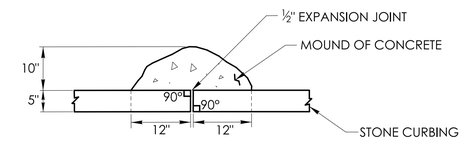

PLAN

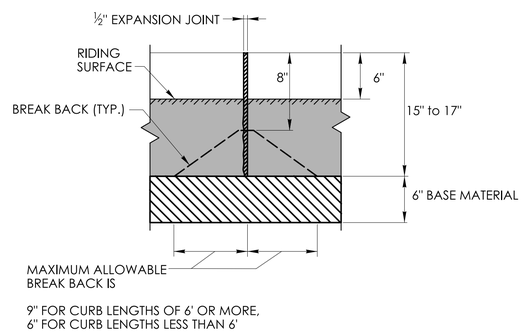

FRONT ELEVATION

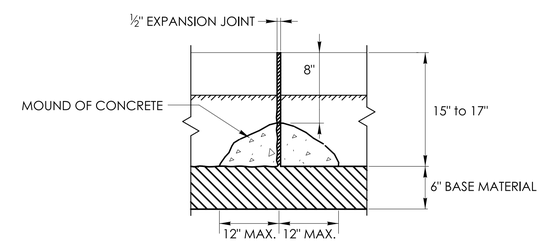

BACK ELEVATION

MOUND OF CONCRETE AT ALL JOINTS FOR STONE CURBING

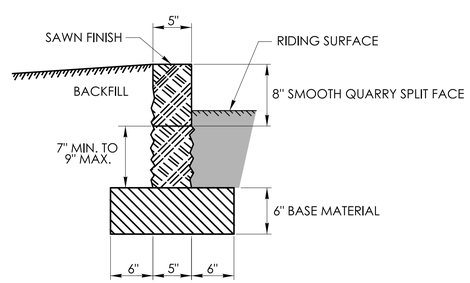

SECTION

	NOT TO SCALE	SIGNATURE BLOCK: OFFICE OF ENGINEERING 2800 BERLIN TURNPIKE NEWINGTON, CT 06111	SUBMITTED BY: Digitally signed by Leo Fontaine, P.E. Date: 2022.09.27 14:42:55-04'00'	APPROVED BY: Digitally signed by Calabrese, Michael Date: 2022.11.08 11:40:25-05'00'	STATE OF CONNECTICUT DEPARTMENT OF TRANSPORTATION	CTDOT STANDARD SHEET	STANDARD SHEET TITLE: STONE CURBNG	STANDARD SHEET NO.: HW-813_02

PLOTTED DATE: 9/23/2022