GENERAL NOTES:

1. SEE SHEET HW-586_08, FOR CATCH BASIN FRAMES AND GRATES AND HW-586_09 FOR CATCH BASIN LOCK DOWN TOPS.
2. SEE SHEET HW-586_01, CATCH BASIN AND DROP INLET TYPES "C" AND "C-L" TO DETERMINE THE TOP OF FRAME DEPRESSION AT THE GUTTER.
3. ALL BARS SHALL HAVE A MINIMUM 2" COVER.
4. Manufacturing Dimensional Tolerance Table

Any Dimension (D)	Allowable Tolerance
D < 5"	± ¼"
5" ≤ D ≤ 10"	± ½"
D > 10"	± 1"

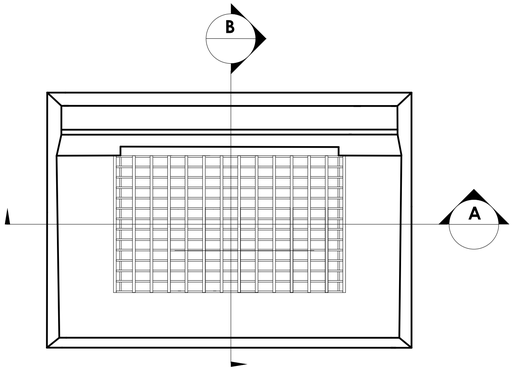

TYPE "C" CATCH BASIN TOP
PLAN

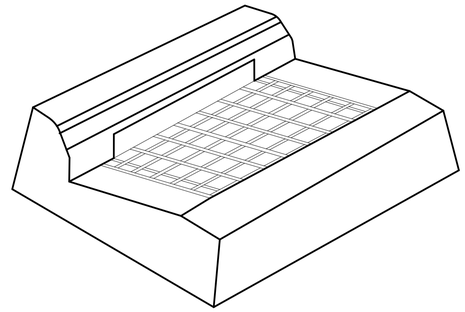

TYPE "C" CATCH BASIN TOP

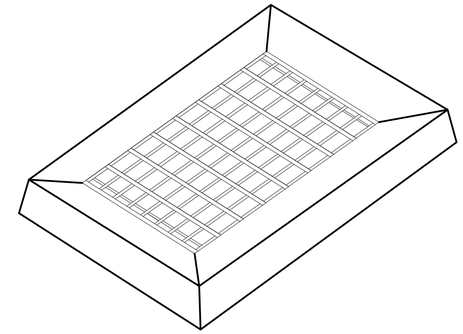

TYPE "C-L" CATCH BASIN TOP

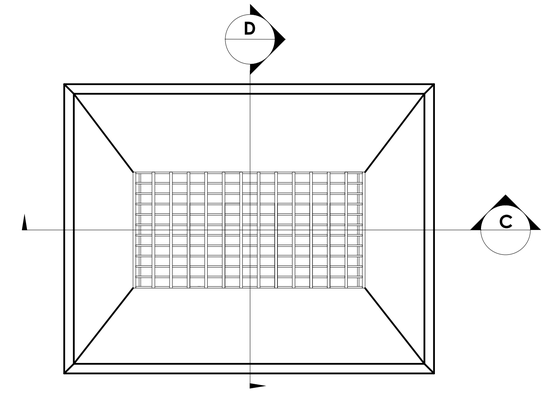

TYPE "C-L" CATCH BASIN TOP
PLAN

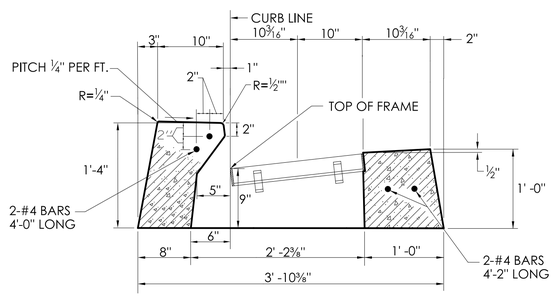

TYPE "C" CATCH BASIN TOP FOR
6" CONCRETE CURBING OR 6" STONE CURBING

SECTION B

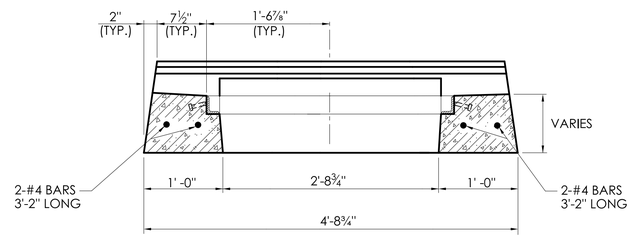

TYPE "C" CATCH BASIN TOP

SECTION A

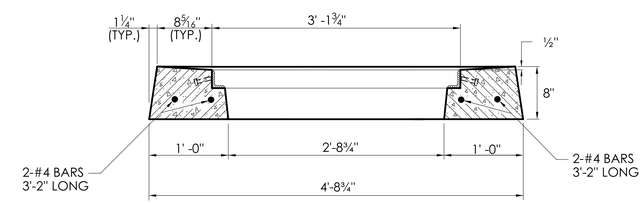

TYPE "C-L" CATCH BASIN TOP

SECTION C

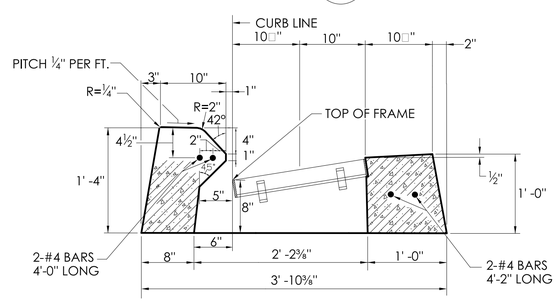

TYPE "C" CATCH BASIN TOP FOR
6" BITUMINOUS CONCRETE LIP CURBING

SECTION B

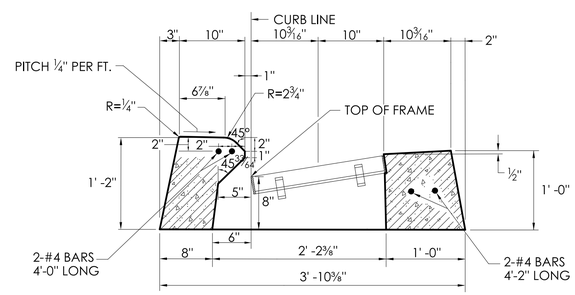

TYPE "C" CATCH BASIN TOP FOR
4" CONCRETE PARK CURBING OR
4" BITUMINOUS CONCRETE PARK CURBING

SECTION B

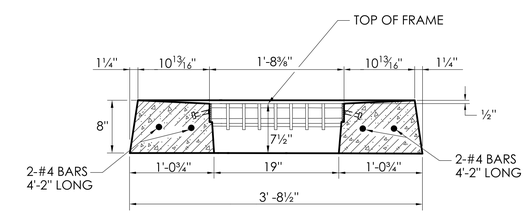

TYPE "C-L" CATCH BASIN TOP

SECTION D

	NOT TO SCALE	SIGNATURE BLOCK: OFFICE OF ENGINEERING 2800 BERLIN TURNPIKE NEWINGTON, CT 06111	SUBMITTED BY: Digitally signed by Leo Fontaine, P.E. Date: 2023.12.28 14:26:18-05'00'	APPROVED BY: Michael N. Calabrese, P.E. 2024.01.04 22:00:22-05'00'	STATE OF CONNECTICUT DEPARTMENT OF TRANSPORTATION	CTDOT STANDARD SHEET	STANDARD SHEET TITLE: CATCH BASIN TYPE "C" AND "C-L" TOPS	STANDARD SHEET NO.: HW- 586_07a

PLOTTED DATE: 12/28/2023