NOTE: VERIFY ALL UTILITY LOCATIONS IN THE FIELD PRIOR TO START OF ANY WORK (SEE NOTE BELOW).

WARNING: THESE PLANS NOT TO BE USED FOR LOCATION OF UNDERGROUND UTILITIES – CALL BEFORE YOU DIG 1–800–922–4455 OR 811 TWO WORKING DAYS BEFORE YOU DIG.

VERTICAL DATUM - NAVD 88 BASED ON CITY SEWER AS-BUILT MAPPING (NVGD 29 AND CONVERTED).

REFERENCE MADE TO MAPS TITLED:

1. "BOARDMAN MANOR OWNED & DEVELOPED BY JOHN COLLINS BRISTOL, CT AUGUST 1940" BY SPERRY & BUELL INC. CIVIL ENGINEERS (B.L.R. MAP VOL. 219, PG. 37
2. "PROPOSED SUBDIVISION OF PROPERTY OWNED BY CORNELIUS COLLINS OF COLLINS RD. BRISTOL, JUNE 2, 1947" (B.L.R. MAP VOL. 243, PG. 2)
3. "MAP SHOWING PROPOSED SUBDIVISION OF PROPERTY OWNED BY BRISTOL HOMES INC. ON COLLINS ROAD BRISTOL, CONN. SEPT. 20, 1948, REVISED FROM MAP DATE JUNE 2, 1947" (B.L.R. MAP VOL. 252, PG. 267)
4. "MAP SHOWING STREET LINE OF COLLINS ROAD BRISTOL, CONN. JANUARY 1942" C.M. PFENNIG, CITY ENGINEER (B.L.R. MAP VOL. 187, PG. 32A)
5. "REVISED PLAN OF LOTS IN BRISTOL, CONN. OWNED BY CORNELIUS H. COLLINS AUG. 28, 1953" BY ADRIAN M. MATTHEWS (B.L.R. MAP VOL. 292, PG. 16A)
6. CITY OF BRISTOL EASEMENT FOR MINE BROOK INTERCEPTOR RELIEF SEWER BRISTOL, CONN. MAY 1, 1980 SHEET 8 OF 9,REV. MAR. 9, 1981" BY MATTSON ASSOCIATES CHESHIRE, CONN. (ENG. DEPT. MAP 28-180G)
7. "MAP SHOWING SEWER EASEMENT OVER LAND OF COLLINS, BROW ET AL BRISTOL, CONNECTICUT MARCH 1954" C.M. PFENNIG, CITY ENGINEER (B.L.R. MAP VOL. 294, PG. 48-2)
8. "MAP SHOWING SEWER EASEMENT OVER THE CITY OF NEW BRITAIN BRISTOL, CONN. JAN. 1958" ENG. DEPT. CITY OF BRISTOL (B.L.R. MAP VOL. 377, PG. 2)

TYPE OF SURVEY: PROPERTY & TOPOGRAPHIC
BOUNDARY DETERMINATION CATEGORY: RESURVEY
CLASS OF ACCURACY: A-2, T-2

PREPARED BY:

City of Bristol
Department of Public Works
111 North Main Street
Bristol, Connecticut 06010
Tel. 860-584-6125
Fax 860-584-3838

Bristol CONNECTICUT Old Heart

No.	DATE	COMMENTS:

DESIGN BY: ---
DRAFTED BY: ---
CHECKED BY:
SCALE: 1" = 20'
DATE: 03/13/2024
PROJECT No.:

EXISTING CONDITIONS & EASEMENTS
COLLINS ROAD
Bristol, Connecticut

DRAINAGE PLAN

DRAWING NUMBER:

01

24" RCP - 147 LF @ 0.5%
HAY BALES
24" REINFORCED CONCRETE FLARED END SECTION
INV. (IN) = 245.84
INV. (OUT) = 245.80

SILT FENCING (TYP.)
PROPOSED EASEMENT (15' WIDE)
STORM MANHOLE
T.F. = 250.50
INV. (IN) = 246.65
INV. (OUT) = 246.64
24" RCP - 24.5 LF @ 0.5%
STORM MANHOLE
T.F. = 250.50
INV. (IN) = 246.70
INV. (OUT) = 246.69
24" RCP - 69 LF @ 0.5%
STORM MANHOLE
T.F. = 250.25
INV. (IN) = 247.10
INV. (OUT) = 247.09
24" RCP - 15 LF @ 0.5%
STORM MANHOLE
T.F. = 250.25
INV. (IN) = 247.15
INV. (OUT) = 247.14
PROPOSED EASEMENT (10' WIDE)
ORANGE CONSTRUCTION FENCE TO BE INSTALLED AROUND SHED FOR DURATION OF CONSTRUCTION
24" RCP - 171 LF @ 0.5%
TEMPORARY CONSTRUCTION EASEMENT

MODIFY EXISTING 'CL' CATCH BASIN
T.F. = 256.07 ± (TO REMAIN)
(NE) INV. IN = 252.07 ± (TO REMAIN)
(SE) INV. IN = 252.12 ± (TO REMAIN)
(SW) INV. IN. = 252.36 ± (TO REMAIN)
(NW) INV. OUT = 248.00
DRIVEWAY APRON
RECONSTRUCT DOUBLE WIDE BITUMINOUS CONCRETE DRIVEWAY

N/F NEW BRITAIN WATER DEPT. PARCEL 53-147 191/158
N/F GARY HOXHA PARCEL 53-50 2226/769
N/F JOHN A. & MICHELLE L. McKENNEY PARCEL 53-51B 1517/375
N/F JEFFREY A. MARTIN 1695/23 LOT 51A "MAP 243-2" (SHOULD READ MAP 252-67)
N/F GARY HOXHA 2226/769
N/F ANGELO & CATHERINE E. MANZO 1425/1095 LOT 49 MAP 243-2
N/F JOSEPH C. + SANDRA M. RUBINOWSKI 962/712 PT. LOTS 52 & 53 MAP 239-37
N/F ADRIEN MORIN JR & DONNA MORIN 2085/418

EXISTING SMH TF=251.31 INV=COULD NOT OPEN
EXISTING SMH AB STA.7+99.42 TF=251.41 INV=243.13
EXISTING SMH TF=248.03 INV=COULD NOT OPEN
EXISTING SMH AB STA. 4+44.84 TF=248.88 INV=242.42
EXISTING SMH TF=257.03 INV=250.2
BENCHMARK TOP OF FRAME SAN. MANHOLE ELEV.=257.03 (NAVD 88)
CB DBL-GRT TF=256.23 FL=253.25
CB (TYPE C-L) TF=256.07 FL=252.07(NE) FL=252.12(SE) FL=252.36(SW)
CB TF=256.29 FL=252.73(12"RCP) FL=253.40(4"CLAY)
CB DBL-GRT TF=256.73 FL=253.12

EXISTING DRAINAGE R.O.W. VOL. 197, PG. 335 6/3/1941 (MAP 219-37)
EXISTING 8" TILE SAN.C.-205 @ 0.49% (1954)
EXISTING 18" TRANSITE SAN. SEWER @ 0.20%
30' SAN. SEWER EASEMENT VOL. 726, PG 131 6/17/1991
10' SAN. SEWER EASEMENT VOL. 375, PG. 9 5/7/1958
10' SAN. SEWER EASEMENT VOL. 720, PG. 132 6/17/1991
20' SAN. SEWER EASEMENT VOL. 302, PG. 50 5/28/1954
APPROX. LIMIT OF FLOODWAY
COLLINS ROAD

PREPARED BY:
City of Bristol
Department of Public Works
111 North Main Street
Bristol, Connecticut 06010
Tel. 860-584-6125
Fax 860-584-3838

No.	DATE	COMMENTS:

DESIGN BY: WRS
DRAFTED BY: WRS
CHECKED BY:
SCALE: 1" = 20'
DATE: 03/12/2024
PROJECT No.:

DRAINAGE OUTFALL CONSTRUCTION
87 COLLINS ROAD
Bristol, Connecticut

SITE PLAN

DRAWING NUMBER:
02

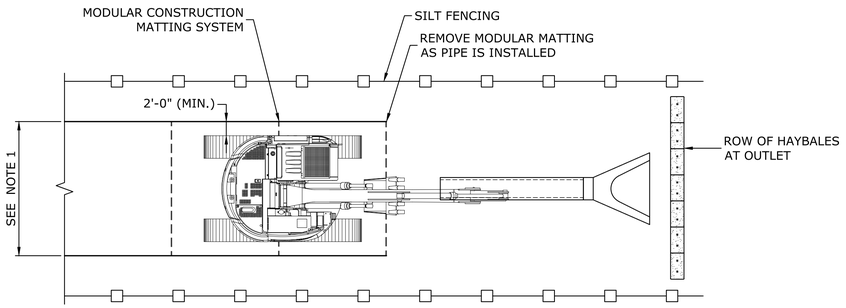

CONSTRUCTION MATTING - PLAN VIEW

SCALE: $\frac{1}{8}$" = 1'-0"

NOTE:

1. MINIMUM WITH OF CONSTRUCTION MATTING SHALL BE ADEQUATE TO SUPPORT ACCESS FOR ALL ANTICIPATED CONSTRUCTION VEHICLES.
2. CONSTRUCTION MATTING SHALL BE INSTALLED PRIOR TO ANY PROPOSED CONSTRUCTION ACTIVITIES.
3. SILT FENCING SHALL BE INSTALLED AS DIRECTED BY THE ENGINEER TO PROVIDE ADEQUATE PROTECTION FROM SITUATION IN THE SURROUNDING AREA.

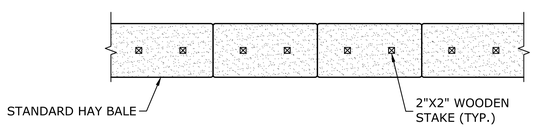

HAY BALE - PLAN

SCALE: $\frac{1}{2}$" = 1'-0"

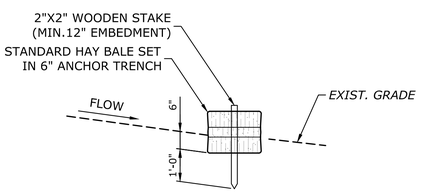

HAY BALE - SECTION

SCALE: $\frac{1}{2}$" = 1'-0"

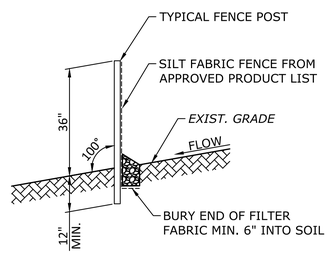

TYPICAL SEDIMENTATION CONTROL SYSTEM SECTION

SCALE: $\frac{1}{2}$" = 1' -0"

NOTE:

HAYBALES ARE NOT PERMITTED AS A SUBSTITUTE FOR SILT FENCE.

PREPARED BY:

City of Bristol
Department of Public Works
111 North Main Street
Bristol, Connecticut 06010
Tel. 860-584-6125
Fax 860-584-3838

No.	DATE	COMMENTS:

DESIGN BY: WRS
DRAFTED BY: WRS
CHECKED BY:
SCALE: 1" = 20'
DATE: 03/12/2024
PROJECT No:

DRAINAGE OUTFALL CONSTRUCTION
87 COLLINS ROAD
Bristol, Connecticut

S&E CONTROLS

DRAWING NUMBER:

03